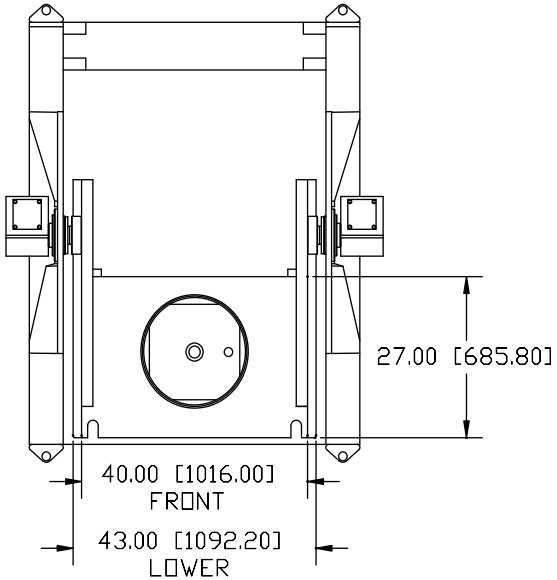

HALL
PERMANENT MOLD MACHINES
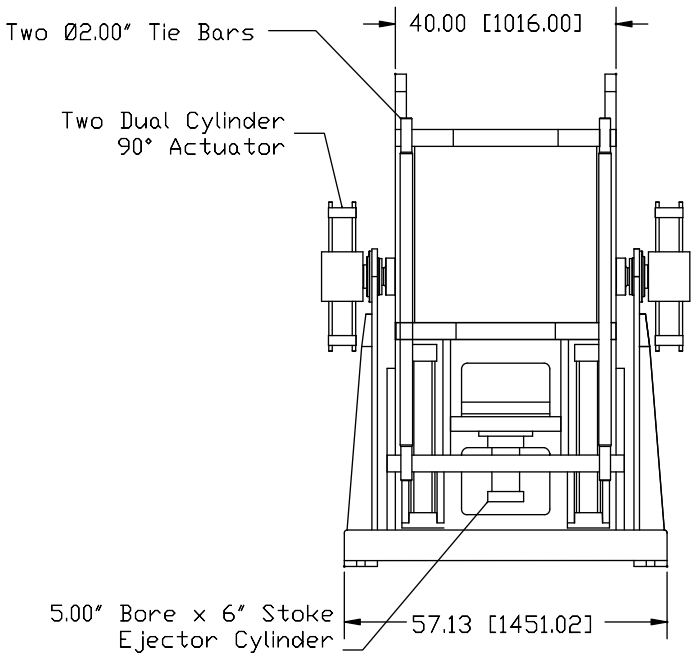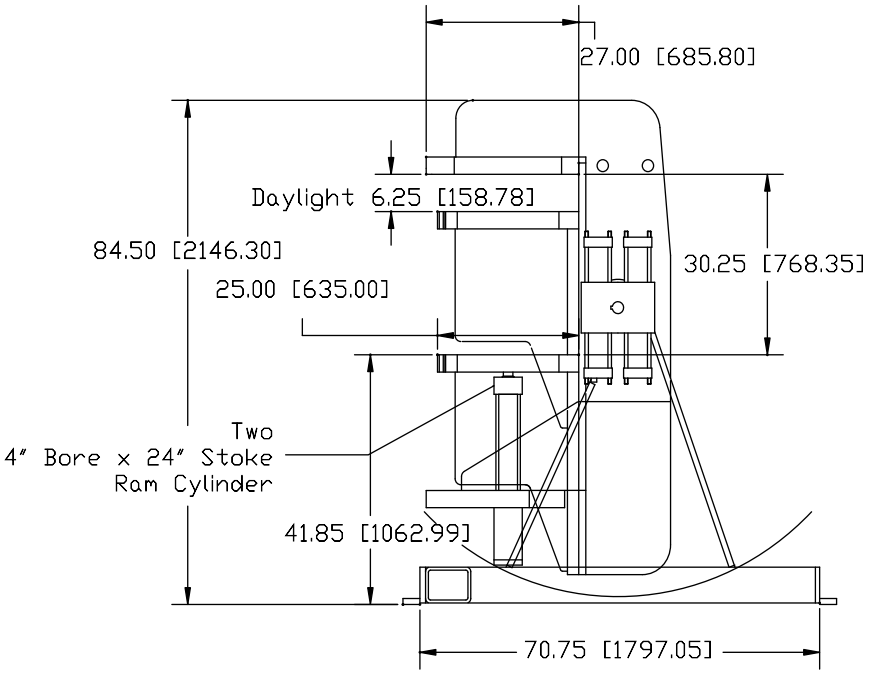
KEY: INCH [MM]