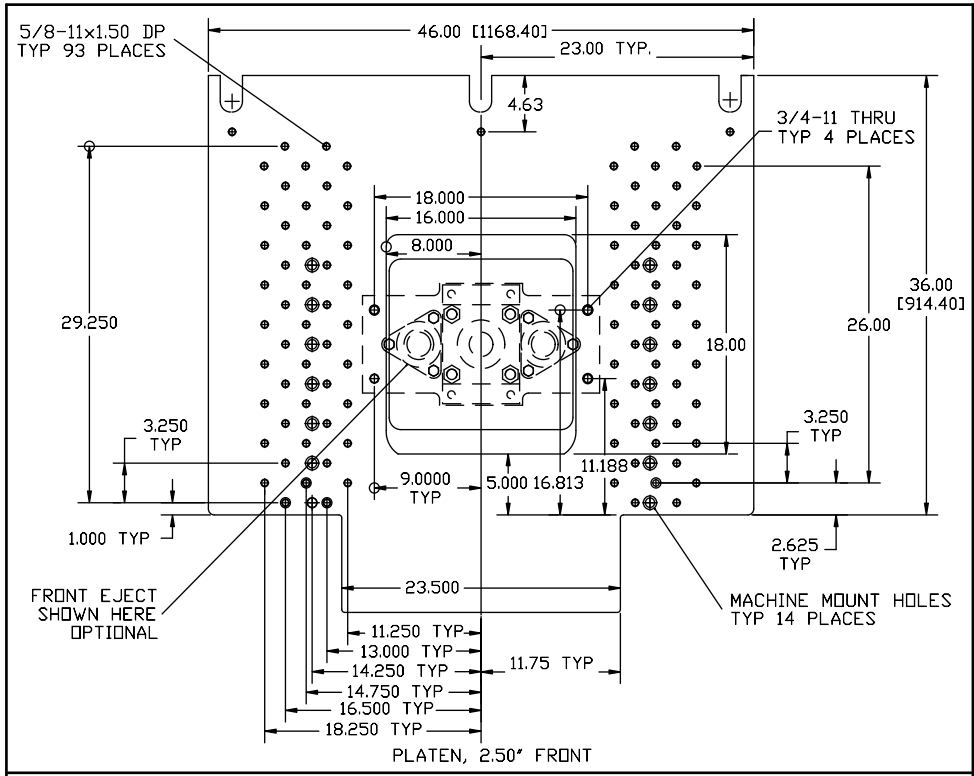

PLATEN, 2.50" FRONT

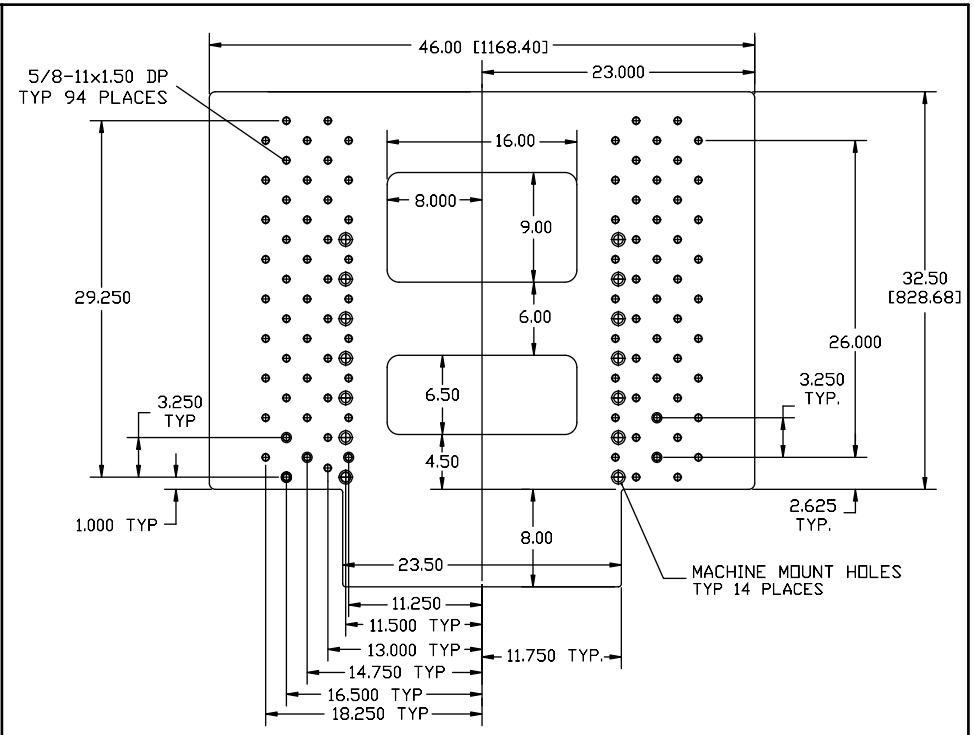

PLATEN, 2.50" MOVABLE

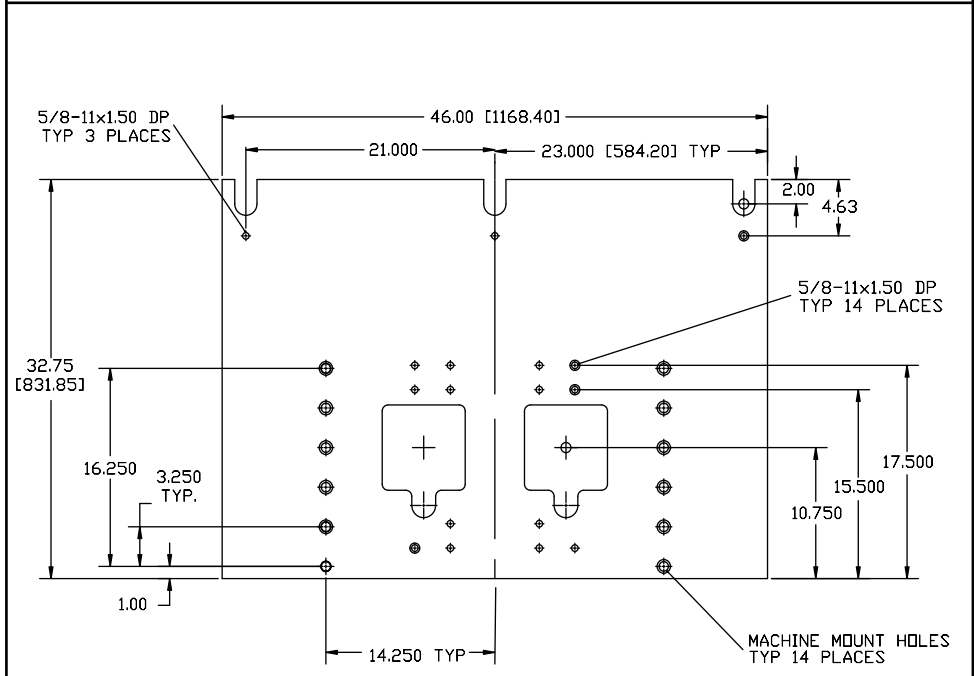

PLATEN, 2.00" REAR

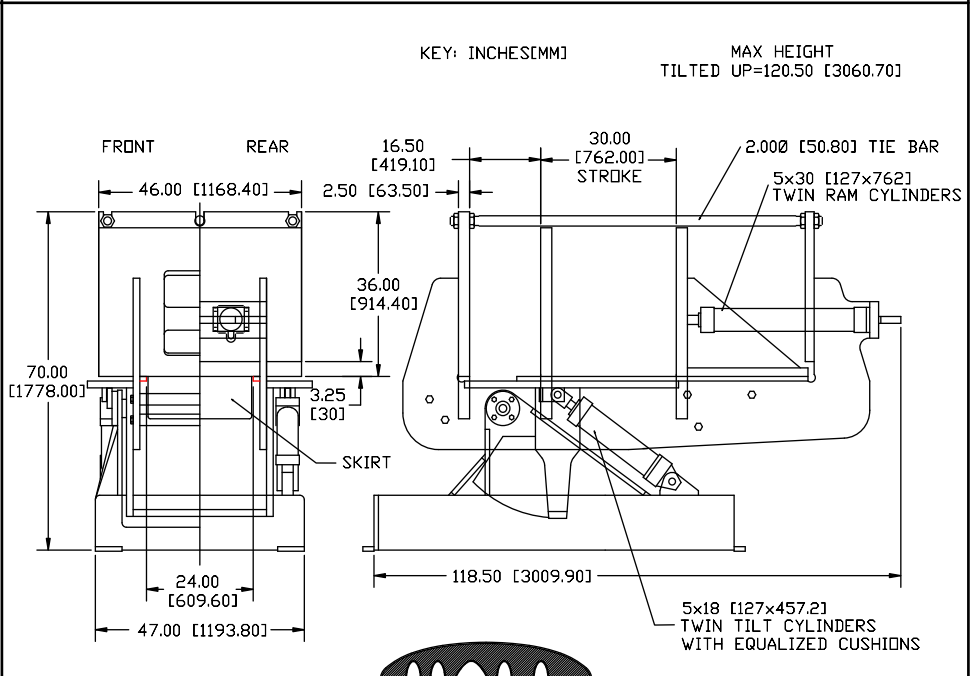

HALL

PERMANENT MOLD MACHINES