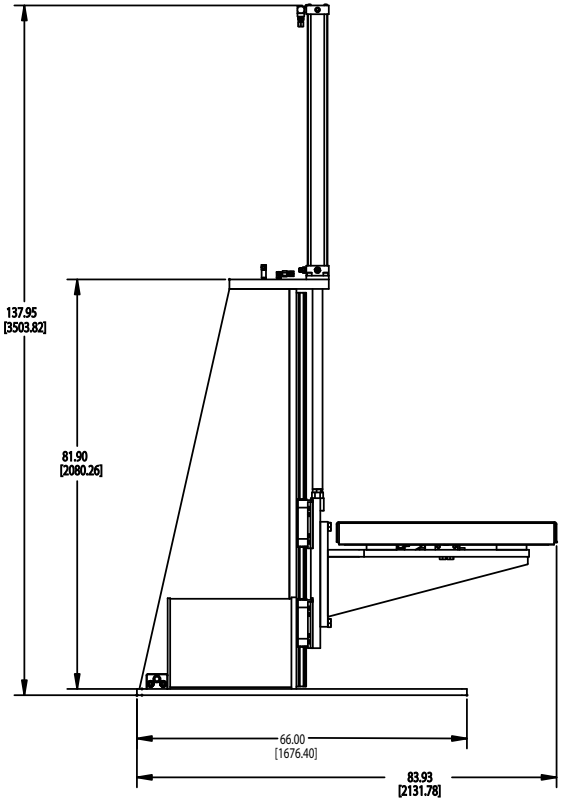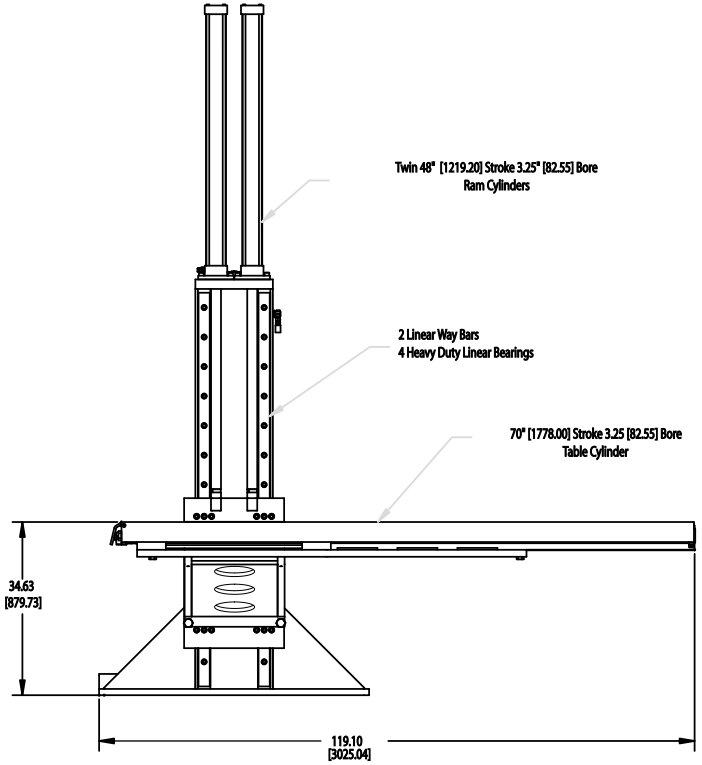5CCR Casting Catcher
IN [MM]